Immersion Pumps
TE/STE141...146

Semi-open impellers

BRINKMANN PUMPS

60 Hz

TE141, 142

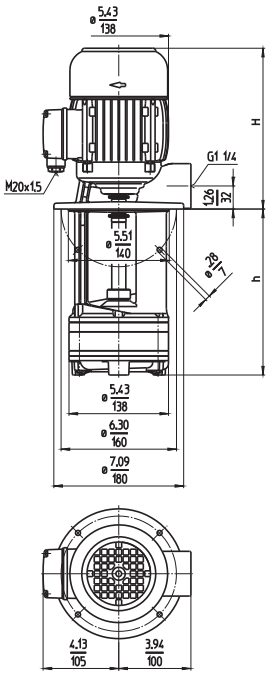

STE141...146

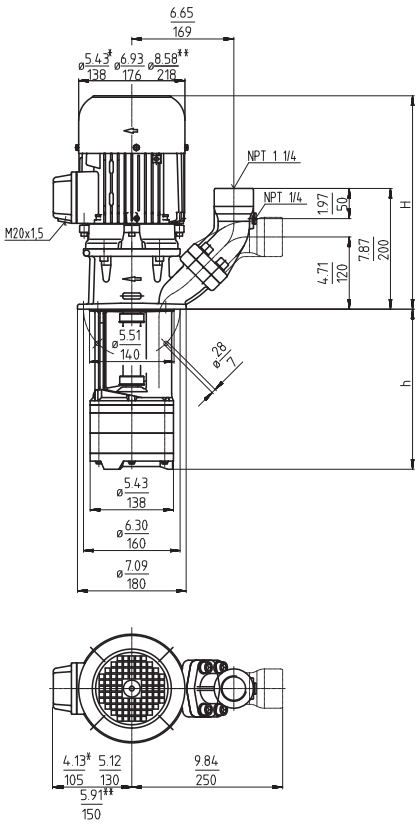

Type	Flow at head GPM /Feet	Height H inch	Depth of immersion h inch	*h mm*	Weight Lbs	*kg*	Power HP *kW*	Voltage 3 ~ V	Frequency Hz	Current AMPS	Speed RPM
TE141S200	25/30	10.4	7.87	*200*	33.1	*15.0*	1	208-230	60	3.02	3425
270			10.63	*270*	35.3	*16.0*	*0.725*	460	60	1.46	3425
350			13.78	*350*	37.5	*17.0*					
440			17.32	*440*	40.8	*18.5*					
550			21.65	*550*	44.1	*20.0*					
TE142S150	30/60	11.5	5.91	*150*	36.4	*16.5*	1.7	230	60	4.8	3440
230			9.06	*230*	39.7	*18.0*	*1.27*	460	60	2.4	3440
300			11.81	*300*	40.8	*18.5*					
380			14.96	*380*	43.0	*19.5*					
470			18.50	*470*	46.3	*21.0*					
580			22.83	*580*	50.7	*23.0*					
STE141S120	25/30	13.1	4.72	*120*	41.9	*19.0*	1	208-230	60	3.02	3425
200			7.87	*200*	44.1	*20.0*	*0.725*	460	60	1.46	3425
270			10.63	*270*	46.3	*21.0*					
350			13.78	*350*	48.5	*22.0*					
440			17.32	*440*	51.8	*23.5*					
550			21.65	*550*	55.1	*25.0*					
STE142S150	30/60	14.2	5.91	*150*	47.4	*21.5*	1.7	230	60	4.8	3440
230			9.06	*230*	50.7	*23.0*	*1.27*	460	60	2.4	3440
300			11.81	*300*	51.8	*23.5*					
380			14.96	*380*	54.0	*24.5*					
470			18.50	*470*	57.3	*26.0*					
580			22.83	*580*	61.7	*28.0*					
STE143S190	30/88	16.0	7.28	*185*	70.6	*32*	2.6	230	60	7.0	3480
270			10.43	*265*	72.8	*33*	*1.95*	460	60	3.5	3480
340			13.19	*335*	75.0	*34*					
420			16.34	*415*	77.2	*35*					
510			19.88	*505*	79.4	*36*					
620			24.21	*615*	83.8	*38*					
STE144S220	30/115	17.3	8.66	*220*	79.4	*36*	3.4	230	60	8.8	3480
300			11.81	*300*	81.6	*37*	*2.55*	460	60	4.4	3480
370			14.57	*370*	83.8	*38*					
450			17.72	*450*	86.0	*39*					
540			21.26	*540*	90.4	*41*					
650			25.59	*650*	92.6	*42*					
STE145S270	30/162	17.3	10.63	*270*	88.2	*40*	3.9	230	60	10.2	3480
350			13.78	*350*	90.4	*41*	*2.94*	460	60	5.1	3480
420			16.54	*420*	92.6	*42*					
500			19.69	*500*	94.8	*43*					
590			23.23	*590*	97.0	*44*					
700			27.56	*700*	101.4	*46*					
STE146S300	30/195	18.8	12.01	*305*	114.7	*52*	6.1	230	60	15.8	3520
380			15.16	*385*	116.9	*53*	*4.55*	460	60	7.9	3520
450			17.91	*455*	119.1	*54*					
530			21.06	*535*	121.3	*55*					

Dimensions in Inches / mm
*) Dimensions STE141, 142
**) Dimensions STE146

Edition 08/21
Subject to alteration

BRINKMANN PUMPS

60 Hz

Immersion Pumps

are centrifugal pumps with the impeller fitted on the driving shaft extension. They are mounted on top of the container, the pump extension being immersed in the coolant.
The maximum coolant level must stay a few inches below the mounting flange.
The delivery capacities shown in the tables apply to water at 4.6 SSU (1 mm²/s) and 68°F (20°C).
For the delivery of oils, the values will decrease due to higher viscosities which result in an increased pipe resistance.
The STE pumps are equipped with the user-friendly 45 degree **(SAE) flange** connection which allows for either vertical or horizontal pipe connection and the connection of a pressure gauge.

All types are also available as quick-suctioning immersion pumps equipped with "**BRINKMANN's Suction De-aeration System".** See series TL/STL.

Applications

Types of fluid
- coolants
- cooling/cutting oils

Kinematic viscosity
- ...200 SSU (...45 mm²/s)

Pumping temperature
- 30...140 °F (0...60 °C)

Construction

Pump body	cast iron
Cover	cast iron
	PPS (TE141)
Impellers	PPS
Shaft	steel
Optional:	
Cover	cast iron (TE141)
Suction cover	with threaded G 1 ½ inlet
Impellers	cast steel
Other materials	on request

Noise level (Motor only; Tolerance +3 dBA)
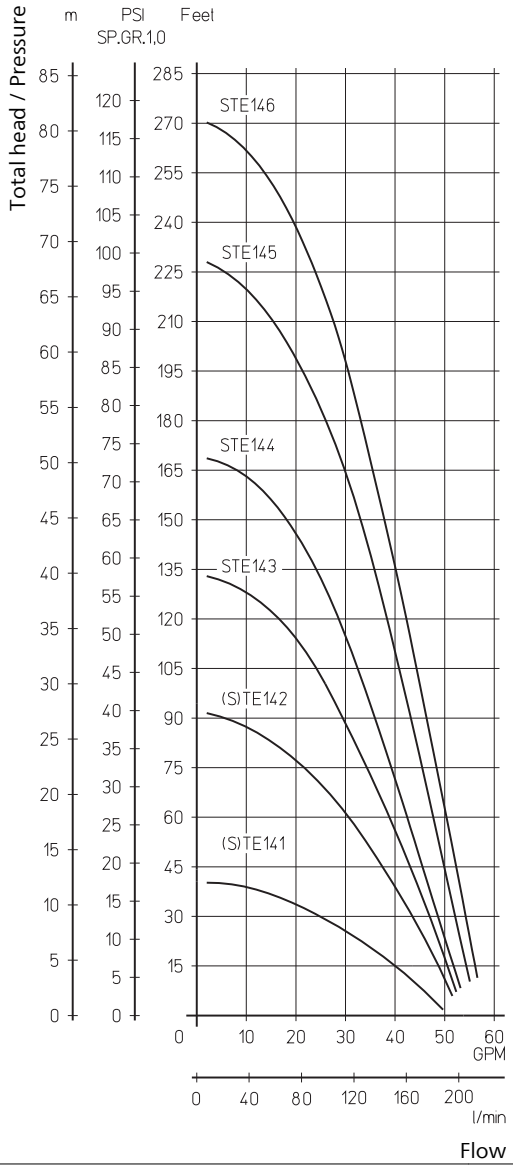
TE141...STE142	62 dBA
STE143...STE145	69 dBA
STE146	73 dBA