Vertical End Suction Pumps
SBA601...604-V

Axial/semi-open impellers

SBA601-V...604-V

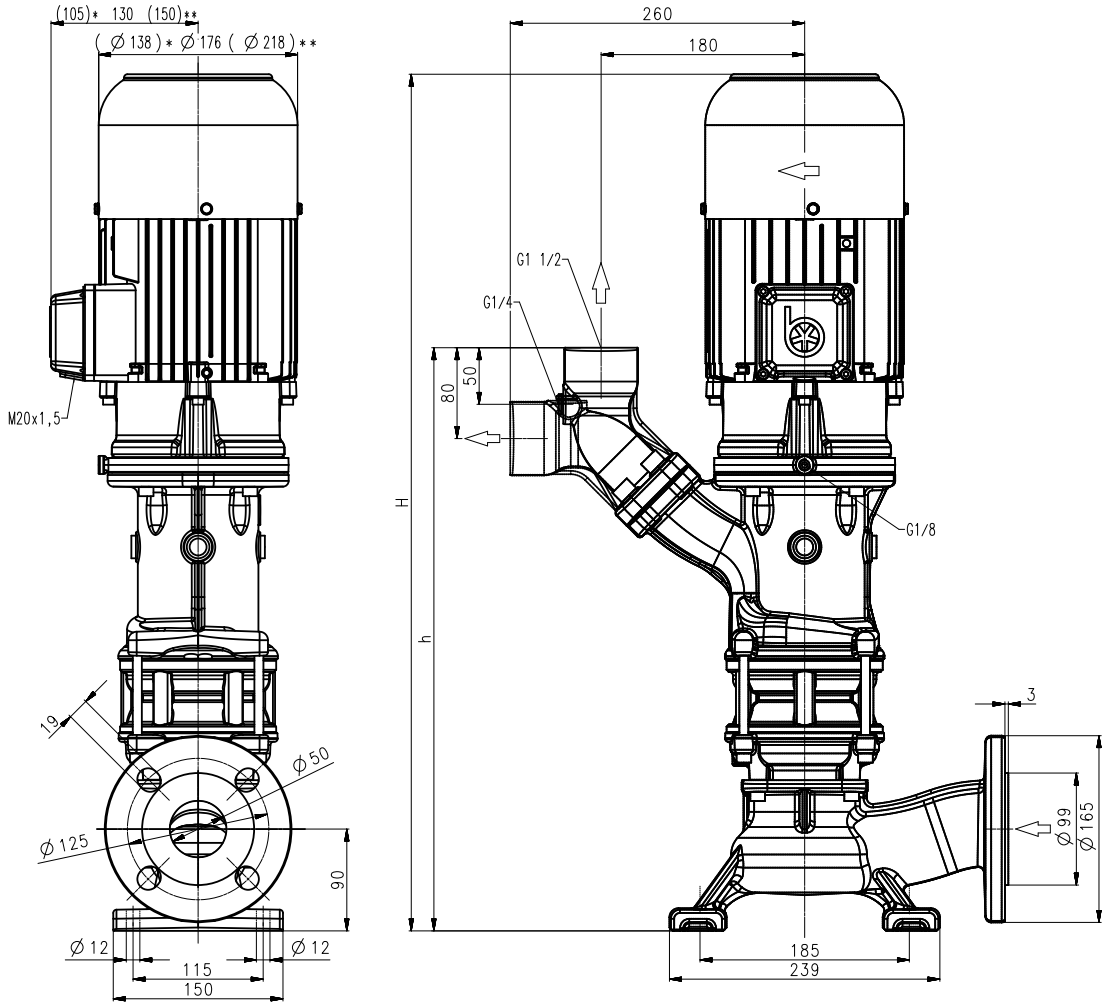

*) Dimensions for SBA 601-V
**) Dimensions for SBA603-V, 604-V

Type	Vol. del. at manom. del. head l/min /m	Dimensions H mm	h mm	Weight kg	Power kW	Voltage 3 ~ V	Fre-quen-cy Hz	Current A	Speed 1/min
SBA601-V	300/6.5	616	452	35	1.1	220-240	50	4.33	2850
						380-415	50	2.50	2850
					1.27	460	60	2.4	3440
SBA602-V	300/16	758	516	49	2.2	220-240	50	7.8	2890
						380-415	50	4.5	2890
					2.55	460	60	4.4	3480
SBA603-V	300/25	861	580	64.5	3.3	220-240	50	11.6	2930
						380-415	50	6.7	2930
					3.8	460	60	6.4	3520
SBA604-V	300/35	955	644	74.5	5.0	220-240	50	17.3	2920
						380-415	50	10.0	2920
					5.75	460	60	9.5	3520

Vertical End Suction Pumps

are centrifugal inline pumps with a compact design where the impeller is mounted onto the extended motor shaft.
These pumps are not self-priming and must be gravity fed. All pumps are equipped with double mechanical seal.
This pump series is designed for vertical installations next to a tank and for pumping **air entrained coolant** fluids, such as **water-soluble coolants or cutting oils**, as they occur **in high speed turning, milling or grinding applications**.
The SBA pumps are equipped with the user-friendly 45 degree **flange** connection which allows for either vertical or horizontal pipe connection and the connection of a pressure gauge with G ¼.
For more information see mechanical features within the technical information section..

Applications

Types of fluid
- coolants
- cooling/cutting oils

Kinematic viscosity
- ...45 mm²/s (45 cSt)

Pumping temperature
- 0...80° C

Construction

Pump body	cast iron
Cover	cast iron
Impeller axial	cast steel
Impeller radial	cast steel
Shaft	steel
Mechanical seal	SiC

Noise level
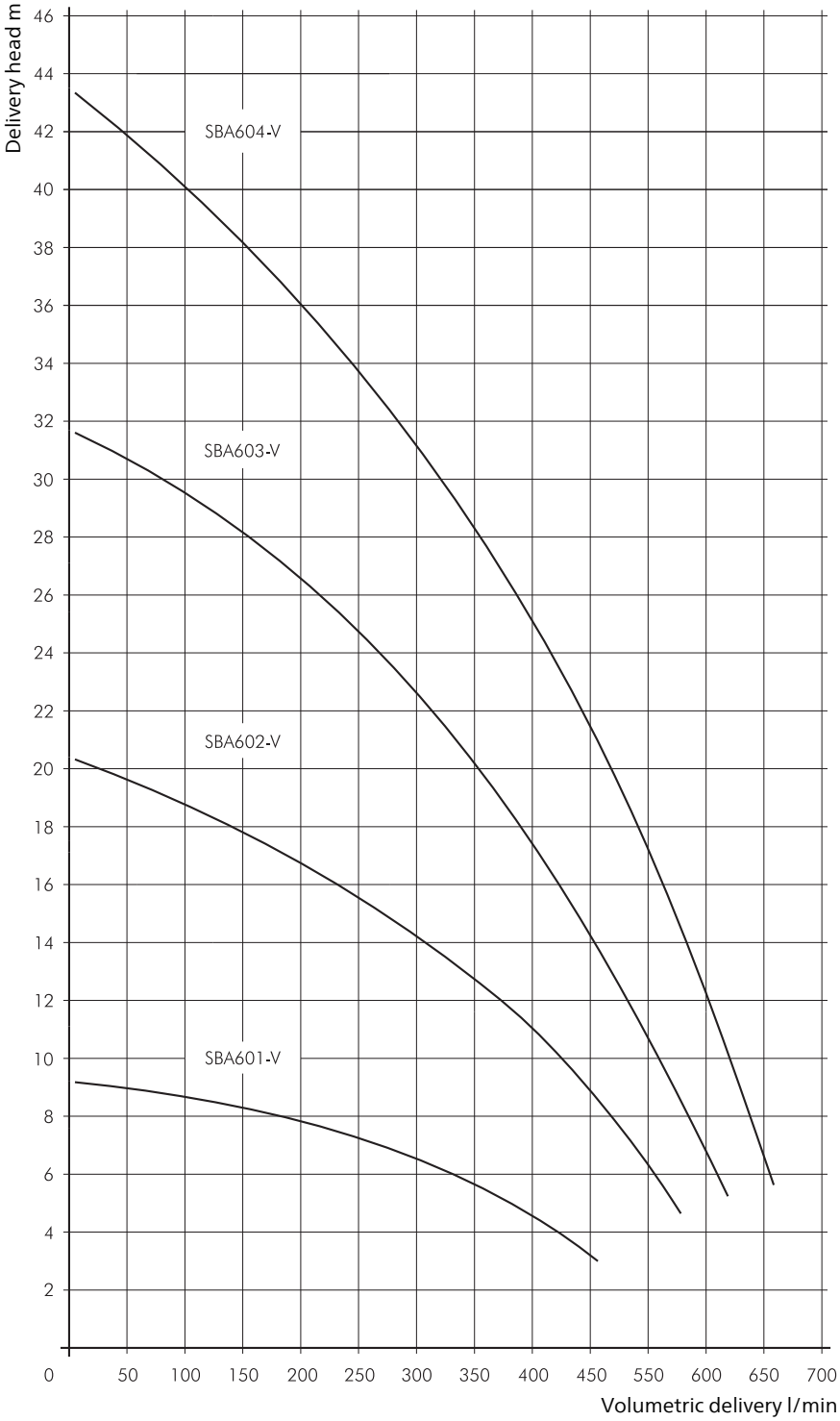
SBA601-V	62 dBA
SBA602-V	66 dBA
SBA603-V...SBA604-V	71 dBA