# Horizontal End-Suction Pumps
# SBA1301S...1303S

## Axial/semi-open impellers

60 Hz

### SBA1301S...1303S

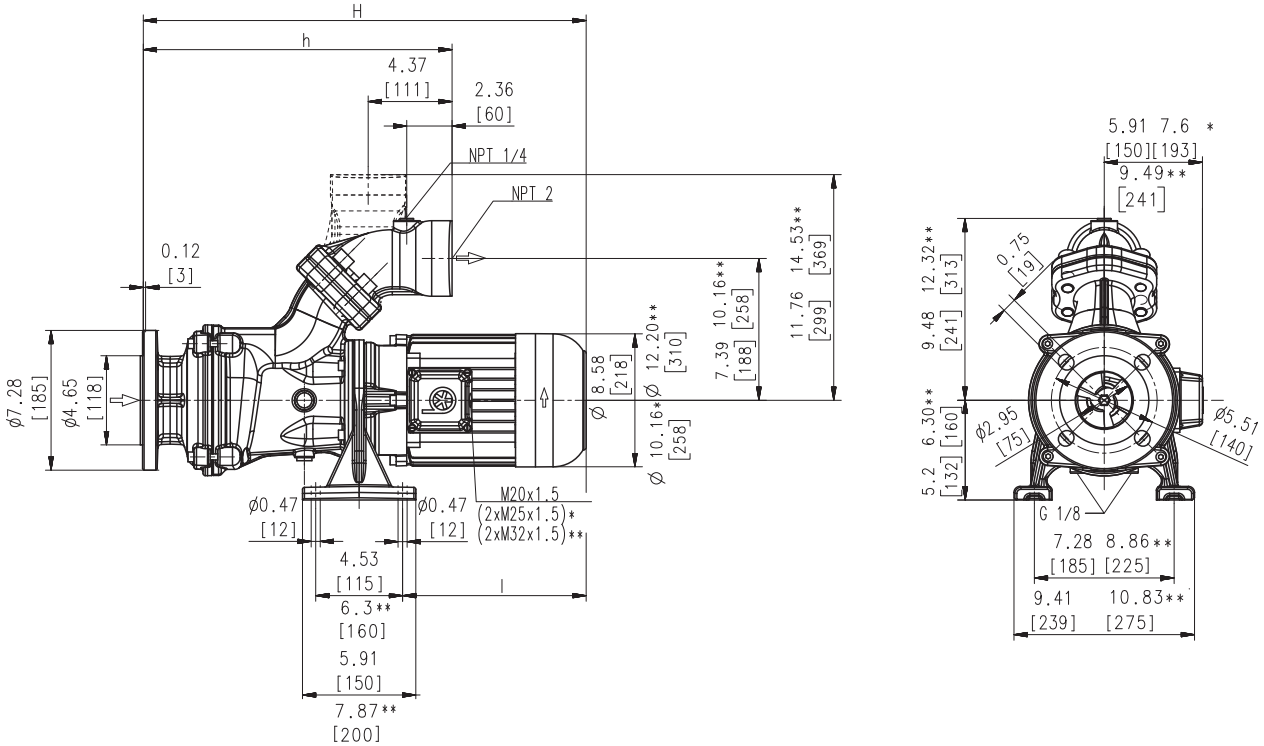


Dimensions in Inches / mm,
*) Dimensions SBA1302S
**) Dimensions SBA1303S

| Type | Flow at head GPM /Feet l/min /m | Dimensions H inch | H mm | h inch | h mm | Length l Inch | l mm | Weight Lbs | kg | Power HP kW | Voltage 3 ~ V | Fre-quen-cy Hz | Current AMPS | Speed RPM |
|---|---|---|---|---|---|---|---|---|---|---|---|---|---|---|
| **SBA1301S** | 225/44 | 27.8 | *705* | 16.3 | *413* | 14.1 | *358* | 161.0 | *73* | 7.7 | 230 | 60 | 19.0 | 3520 |
| | *900/12* | | | | | | | | | *5.75* | 460 | 60 | 9.5 | 3520 |
| **SBA1302S** | 225/90 | 34.0 | *863* | 19.4 | *492* | 17.2 | *437* | 258 | *117* | 11.5 | 230 | 60 | 27.8 | 3550 |
| | *900/25* | | | | | | | | | *8.6* | 460 | 60 | 13.9 | 3550 |
| **SBA1303S** | 225/135 | 37.4 | *951* | 25.3 | *643* | 16.6 | *422* | 313 | *142* | 16.9 | 230 | 60 | 39.2 | 3560 |
| | *900/39* | | | | | | | | | *12.6* | 460 | 60 | 19.6 | 3560 |

BRINKMANN PUMPS

60 Hz

## Horizontal End-Suction Pumps

are centrifugal inline pumps with a compact design where the impeller is mounted onto the extended motor shaft.
These pumps are not self-priming and must be gravity fed. All pumps are equipped with a single mechanical seal.
Upon request a second mechanical seal is available for single-stage pumps to allow for dry-running (-GD).
This pump series is designed for horizontal installations next to a tank and for pumping **air entrained coolant** fluids, such as **water-soluble coolants or cutting oils**, as they occur **in high speed turning, milling or grinding applications.**
The SBA pumps are equipped with the user-friendly 45 degree **flange** connection which allows for either vertical or horizontal pipe connection and the connection of a pressure gauge with NPT 1/4.
For more information see mechanical features within the technical information section.

## Applications

Types of fluid
- coolants
- cooling/cutting oils

Kinematic viscosity
- ...200 SSU (...45 $mm^2/s$)

Pumping temperature
- 30...175 °F (0...80 °C)

## Construction

| | |
|---|---|
| Pump body | cast iron |
| Cover | cast iron |
| Impeller axial | cast steel |
| Impeller radial | cast steel |
| Shaft | steel |
| Mechanical seal | SiC |

Noise level (Motor only; Tolerance +3 dBA)
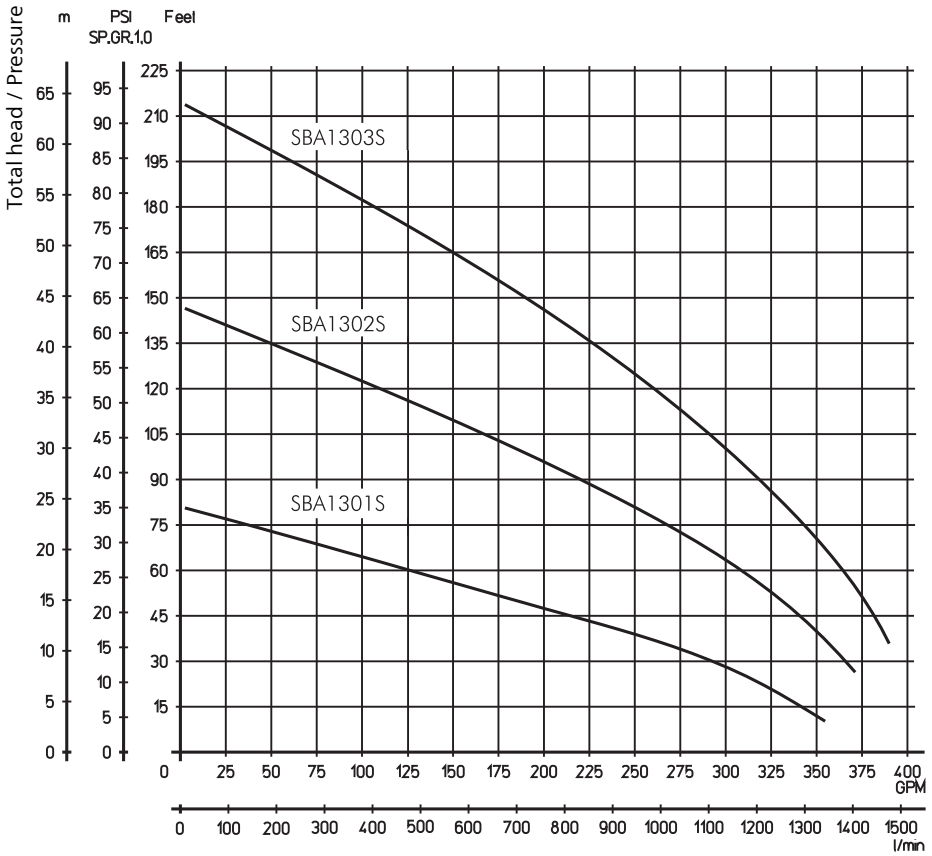
| | |
|---|---|
| SBA1301S | 73 dBA |
| SBA1302S | 78 dBA |
| SBA1303S | 79 dBA |