BRINKMANN-Vertical End Suction Pumps

SBA401...604-V, SBG501...503-V and SBF550-V

Brinkmann Pumpen
K. H. Brinkmann GmbH & Co. KG
Friedrichstraße 2 D-58791 Werdohl
Tel.: +49-2392 / 5006-0
Fax.: +49-2392 / 5006-180
www.brinkmannpumps.de
sales@brinkmannpumps.de

Subject to change without prior notice.

Order - No. : BE8107-V ENGLISH

Brinkmann–Vertical End Suction Pumps Series SBA401...604-V, SBG501...503-V and SBF550-V

Contents

1 Indication to the manual 2
2 Description of product 2-3
3 Safety instructions 3-4
4 Transport and storage 4
5 Installation and Connection 4-5
6 Start up / Shut down 5
7 Operation 5
8 Servicing and Maintenance 6
9 Trouble shooter's guide 6
10 Spare part 7
11 Repair Instructions 8-9
12 Disposal 9
13 Declarations of conformity 10-11

1 Indication to the manual

This operating manual gives basic instructions which are to be observed during installation, operation and maintenance of the pump. It is therefore imperative that this manual be read by the responsible personnel and operator prior to assembly and commissioning. It is always to be kept available at the installation site.

1.1 Identification of safety instructions in the operating manual

Safety instructions given in this manual non-compliance with which would affect **safety** are identified by the following symbol

Safety sign according with ISO 3864–B.3.1

or where **electrical safety** is involved, with:

Safety sign according with ISO 3864–B.3.6

Where non-compliance with the safety instructions may cause a risk to the machine and it's function the word

ATTENTION

is inserted.

2 Description of product

2.1 General description of the pump

Pumps of this type are one or multi-stage centrifugal inline pumps with a compact design where the impellers are fixed on the driving shaft extension. The pump shaft and motor shaft are interconnected by means of a shaft clamp. These pumps are fitted out with semi-open impellers and a suction screw in order to minimize the risk of cavitations. All pumps are equipped with double mechanical seal.

These pumps are for vertical installations next to or underneath a tank. The pumps are foot mounted and must be screwed down in order to ensure a secure stance.

Intended use

These pumps are not self-priming and must be gravity fed. They are designed to handle water-soluble coolants as well as cutting oils within the limiting application in accordance with table 1.

Limit of Application (Table 1)

Type	SBA-V, SBG-V, SBF-V
Mediums	**Coolants**, cooling- and cutting-oils **grindings oils** SBG-V
Chip material **SBF-V**	Aluminium, steel, coloured steels, cast iron max. chip to coolant ratio 1.0%
Kinetic viscosity of the medium	...45 mm^2/s
Temperature of medium	0 ... 80 °C
Particle-size in the medium	6 mm SBA401…403-V 7 mm SBG501…503-V 11 mm SBA601…604-V 11 mm SBF550-V
min. delivery volume	1% of Q max.
Dry running	Dry running causes increased wear and should be avoided. During the test of the direction of rotation (< 30 s) permissible.
Switching-on frequency per hour for SBA-V and SBG-V	Motors less 3 kW max. 200 from 3 kW to 4.0 kW max. 40 from 5.0 kW to 10.3 kW max. 20
SBF-V	The pump SBF-V should be operated in continual operation mode, **not pulsed mode.**
Ambient temperature	40 °C
Set-up altitude	1000 m

ATTENTION

The pumps are to be operated within their design limits. Applications outside of these limits are not approved. The manufacturer is not responsible for any damages resulting from use of the pumps in such applications.

2.2 Technical data

Type	Max. del. pressure bar / spec. weight 1	Max. del. volume l/min	Dimen-sions[1] **H** mm	**h** mm	Weight kg	Power 50 / 60 Hz kW		Noise level[2] dBA / 50 Hz
SBA401-V	0.75	398	586	449	31	0.92	1.06	62
SBA402-V	1.75	421	681	498	40	1.5	1.75	66
SBA403-V	2.7	433	789	547	48	2.2	2.55	66
SBA601-V	0.9	515	616	452	31.5	1.1	1.27	62
SBA602-V	2.0	590	758	516	46	2.2	2.55	66
SBA603-V	3.15	623	861	580	62	3.3	3.8	71
SBA604-V	4.35	650	955	644	72	5.0	5.75	71
SBG501-V	0.8	442	614	449	34	1.1	1.27	67
SBG502-V	2.1	460	756	513	49	2.2	2.55	70
SBG503-V	3.5	460	859	577	64	3.3	3.8	72
SBF550-V	0.65	369	616	452	31.5	1.1	1.27	62

1) Dimensions in accordance with page 4

2) Noise emissions measured in accordance with DIN 45635 at a distance of 1 m.

Pipe connection: Suction side DN65 / PN16.
Pressure side G 1 ½ .

The motor is surface-cooled and compliant with DIN IEC 34 and EN 60034 (protection degree IP 55).

3 Safety instructions

When operating the pump, the safety instructions contained in this manual, the relevant national accident prevention regulations and any other service and safety instructions issued by the plant operator are to be observed.

3.1 Hazards in the event of non-compliance with the safety instructions

Non-compliance with the safety instructions may produce a risk to the personnel as well as to the environment and the machine and results in a loss of any right to claim damages.
For example, non-compliance may involve the following hazards:

- Failure of important functions of the machines/plant
- Failure of specified procedures of maintenance and repair
- Exposure of people to electrical, mechanical and chemical hazards
- Endangering the environment due to hazardous substances being released

3.2 Unauthorized modes of operation

- Pump may not be used in potentially explosive environments**!**
- Pump and pipes are not designed to hold any weight and may not be used as a step ladder.

3.3 Remaining Risk

Risk of Injury!
Risk of squeezing or crushing body parts when installing or removing the pump exists. Proper and secured lifting tools must be used.

Risk of burns!
The pump must have cooled down sufficiently prior to commencing any repair, maintenance or installation.

3.4 Qualification and training of operating personnel

The personnel responsible for operation, maintenance, inspection and assembly must be adequately qualified. Scope of responsibility and supervision of the personnel must be exactly defined by the plant operator. If the staff does not have the necessary knowledge, they must be trained and instructed, which may be performed by the machine manufacturer or supplier on behalf of the plant operator. Moreover, the plant operator is to make sure that the contents of the operating manual are fully understood by the personnel.

3.5 Safety instructions relevant for operation

- If hot or cold machine components involve hazards. they must be guarded against accidental contact.
- Guards for moving parts (e.g. coupling) must not be removed from the machine while in operation.
- Any leakage of hazardous (e.g. explosive, toxic, hot) fluids (e.g. from the shaft seal) must be drained away so as to prevent any risk to persons or the environment. Statutory regulations are to be complied with.
- Hazards resulting from electricity are to be prevented (see for example, the VDE Specifications and the bye-laws of the local power supply utilities).
- The pumps are only secured safely if properly attached to the floor or underneath a tank.
- The female threads on the motor MUST NOT be used to lift the entire pump and motor assembly.

3.6 Safety instructions relevant for maintenance. inspection and assembly work

Any work on the machine shall only be performed when it is at a standstill, it being imperative that the procedure for shutting down the machine described in this manual be followed.
Pumps and pump units which convey hazardous media must be decontaminated.
On completion of work all safety and protective facilities must be re-installed and made operative again.
Prior to restarting the machine, the instructions listed under “Start up” are to be observed.

3.7 Signs on the pump

It is imperative that signs affixed to the machine, e.g.:

- arrow indicating the direction of rotation
- symbols indicating fluid connections

be observed and kept legible.

3.8 Unauthorized alterations and production of spare parts

Any modification may be made to the machine only after consultation with the manufacturer. Using spare parts and accessories authorized by the manufacturer is in the interest of safety. Use of other parts may exempt the manufacturer from any liability.

4 Transport and storage

Protect the pump against damage when transporting.
The pumps may only be transported in a horizontal position and hooks or straps must be attached on the motor and pump end.
Do not use the pump shaft for connecting any transportation aids such as hooks or straps.
Pumps must be drained prior to their storage.
Store pump in dry and protected areas and protect it against penetration of foreign bodies.
Always store pump above the freezing point!

5 Installation and Connection

5.1 Mechanical installation

The pumps must be properly fastened. The pipework must be installed so that no distortion of the pump can occur. The fluid inlet is on the face side of the flange-connected pump mechanism. The clearance between the suction opening and the tank floor should be large enough to prevent the suction opening from becoming blocked even if the coolant is heavily polluted and the pump has not been operated for long periods.
In order to reach the maximum flow rate it is recommended that the pipe diameter is as close as possible to the nominal pump connection diameter. Avoid the introduction of pipe bends (no angled sections).
The installed pipes must be rated for the hydraulic pressures which occur during operation. The positions of the foot and pressure connection can be moved around the circumference to 3 different positions. On the S-type, the pipe connection can also be set to normal or parallel alignment to the pump axis.

SBA-V. SBG-V. SBF-V

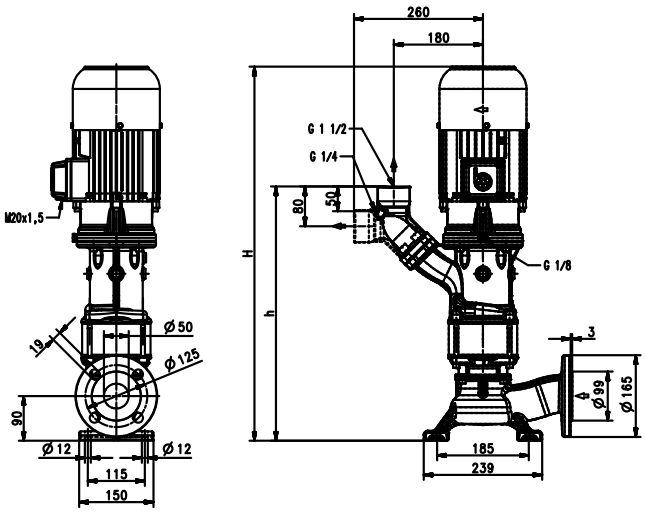

ATTENTION

Maximum tightening torque for piping connections is 150 Nm!

When installed the space around the pump must be large enough to provide sufficient cooling of the motor.

The pump must never under any circumstances be used as a point for securing the piping. No forces or torques from the piping may be allowed to affect the pump. Pipes must be intercepted directly before the pump and connected with no tension.

The pump must be mounted in that way that rotating parts under the cover of the coolant tank can not be touched!

5.2 Electric wiring

All service work must be carried out by qualified service personnel. Pump must be disconnected from the power source and all rotating parts must stand still. Reassure that pump is disconnected from power source and cannot be switched on. Verify that there is no voltage at the terminal board!

According to the European Standard EN809 a motor overload must be installed and properly set to the full load amps stated on the pump name plate.

It is the responsibility of the machine operator to decide whether or not an additional emergency switch must be installed.

5.2.1 Circuit

Tension voltage and frequency must correspond with the shown specification on the nameplate.
The pump must be wired so that a solid longterm electrical connection is ensured. Establish a solid ground connection.

The electrical wiring must be performed according to the wiring diagram shown inside the terminal box cover. (Please see above sample wiring diagrams)

Wiring diagram e.g.

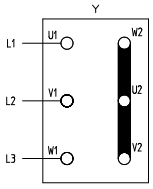

Star connection
3 x 400 V, 50 Hz
resp. 380-415 V, 50 Hz

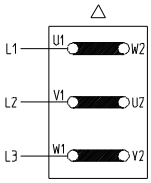

Delta connection
3 x 230 V, 50 Hz
resp. 220-240 V, 50 Hz

There may be no foreign objects such as dirt, particles or humidity inside the terminal board.

Mount terminal board cover to motor tight against dust and humidity and close up all unused wiring ports.

ATTENTION

When Variable Frequency Drives are used interfering signals might occur.
Non-sinus shaped supply voltage from a variable frequency drive might result in elevated motor temperatures.

6 Start up / Shut down

6.1 Start up

ATTENTION

Switch off at the mains.
After connection the electrical wires, close the terminal box. Briefly start the motor (max. 30 sec.) and check the rotation according to the arrow on the top of the motor.
If the direction is incorrect change over two of the power leads.

6.2 Shut down

All service work must be carried out by qualified service personnel. Pump must be disconnected from the power source and all rotating parts must stand still. Reassure that pump is disconnected from power source and cannot be switched on. Verify that there is no voltage at the terminal board!
Open terminal box and disconnect the power leads.
Empty out the pump.

7 Operation

Liquid level

These pumps are not self-priming and must be gravity fed.
Possible leakage must be drained away so as to prevent any risk to persons or the environment.

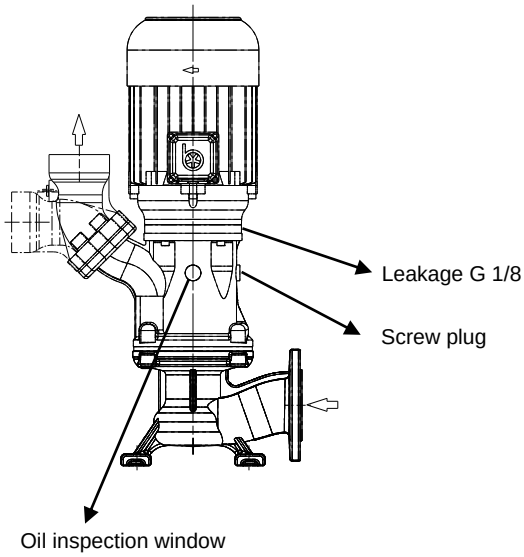

ATTENTION

The SBF-V pump should be operated in continual operation mode, not pulsed mode!
Pulsed mode causes increased wear due to the return flow of chips and additional load on the bearings
The pump should transport medium without chips for 1-2 minutes before being switched off!

If the pump should lock up and cease, shut pump down (see 6.2) and disconnect from power supply. Pump must be uninstalled and removed from the system prior to its repair.

8 Servicing and Maintenance

ATTENTION

The surface of the motor must be kept free of dirt.

The motor shaft is spinning in permanently greased ball bearings (with special grease and increased bearing play) and does not require any special maintenance.

8.1 Pumps with double mechanical seal (-GD)

Pumps with double mechanical seal (-GD) are identified by the letters GLRD stamped in on the motor side of the pump foot and must include an oil receiver with a capacity of 0.28 litres. Check this through the inspection window.
Oil receiver Castrol WHITEMOR WOM14 or equivalent oil.

9 Trouble shooter's guide

Fault	Cause	Remedy
Motor does not start, no motor noise	At least two of the power supply leads have failed Overload has tripped	Check fuses. terminals and supply leads. Inspect overload
Motor does not start. humming noise	One of the supply leads has failed Impeller faulty Motor bearing faulty	See above Replace impeller Replace bearing
Overload trips	Pump locked up mechanically High on/of cycling frequency	Inspect pump hydraulics Check application
Power consumption is too high	Wrong direction of rotation of impeller Lime or other deposits mechanical friction	See above Clean pump mechanism repair pump
Motor overheats	High on/off cycling frequency Wrong power supply (voltage or cycles) Insufficient cooling	See above Power supply must correspond with name plate rating Check air flow at motor fan
Pump does not pump	liquid level too low Pump mechanism faulty Pipe blocked	Fill up liquid replace pump mechanism Clean pipe
Insufficient flow and pressure	Wrong direction of rotation of impeller Pump mechanism silted up Worn pump mechanism	Change over two power supply leads Clean pump mechanism Replace pump mechanism
Incorrect flow or pressure	Wrong power supply (voltage or cycles)	Power supply must correspond with name plate rating
Running noise/Vibration	Foreign objects in pump end Impeller damaged Bearing/Bushing broken	Remove foreign objects Replace impeller Replace bearing/bushing

10 Spare part

10.1 Spare part list for Brinkmann Horizontal End-Suction Pumps Series

SBA401...604-V. SBG501...503-V and SBF550-V

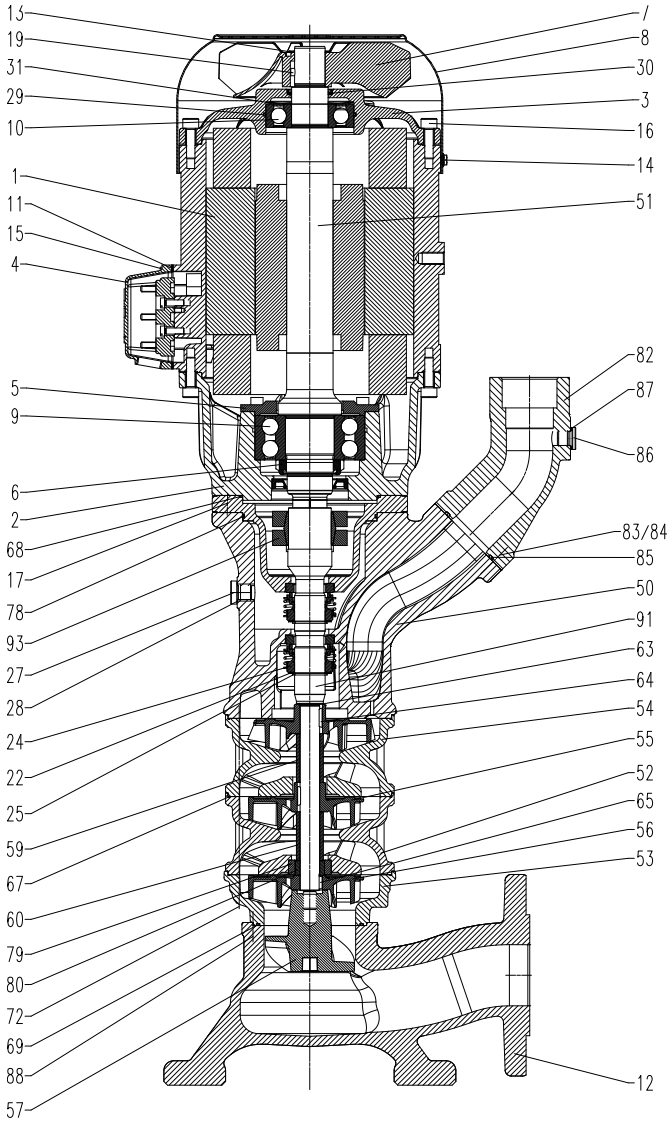

Item	Description	
1	Stator with terminal board	
2	Motor flange	
3	End shield	
4	Terminal box	
5	Retaining ring	DIN 472
6	Retaining ring	DIN 471
7	Fan	
8	Fan cover	
9	Ball bearing	DIN 625
9	Ball bearing 1.5 kW to 2.2 kW	DIN 628
10	Ball bearing	DIN 625
11	Gasket	
12	Connection cover	
13	Retaining ring	
13	Retaining ring 1.5 to 2.2 kW	DIN 471
14	Spiral-shaped screw up 1.5 kW	DIN 7500
15	Socket head cap screw	DIN 84
16	Stud bolt with bond up to 1.1 kW	
16	Socket head cap screw up 1.5 kW	DIN 912
17	Socket head cap screw	DIN 912
19	Parallel pin	DIN 7
22	Mech. seal washer	
24	Mechanical seal	
25	Circlip	
27	Oil inspection window	
27	Screw plug	DIN 908
28	Sealing ring	DIN 7603
29	O-ring	
30	Shaft seal	
31	Compensation disk up 1.5 kW	
50	Pump body	
51	Motor shaft with rotor	
52	Pump plate with bearing bush up SBA402-V, 602-V and SBG502-V	
53	Intake cover	
54	Pump plate SBA403, 603, 604-V and SBG503-V	
55	Impeller	
56	Impeller – bearing stage	
57	Suction screw	
59	Spacer sleeve	
60	Spacer sleeve bearing stage	
63	Spacer ring	
64	Woodruff key	DIN 6888
65	Woodruff key short for bearing stage	
67	O-ring	
68	O-ring	
69	O-ring	
72	Hexagonal head screw	DIN 912
78	O-ring	
79	Bearing bush / bearing stage	
80	Running sleeve / bearing stage	
82	Joining socket	
83	Socket head cap screw	DIN 912
84	Spring washer	DIN 7980
85	O-ring	
86	Screw plug	DIN 908
87	Sealing ring	DIN 7603
88	Socket head cap screw	DIN 912
91	Insert shaft	
93	Shaft clamp	

10.2 Indications to the spare part order

Spare parts are available from the supplier.
Standard commercially available parts are to be purchased in accordance with the model type.
The ordering of spare parts should contain the following details:

1. **Pumptype**
   e.g. SBG502-V
2. **Pump No.**
   e.g. 1120228107-V
   The date of the construction year is a component of the pumps type number.
3. **Voltage. Frequency and Power**
   Take item 1, 2 and 3 from the nameplate
4. **Spare part with item No.**
   e.g. Intake cover item No. 53

11 Repair Instructions / Replacing the rotary mechanical seal / the shaft clamp

11.1 Replacing the rotary mechanical seal

Wear safety gloves!
Risk of injury due to sharp edges on pump components, i.e. impeller blades.

1) Disconnect the pump electrically and mechanically. Note the markings on the pump components prior to dismantling. When completely dismantling a unit with dual axial face seals, drain the medium in the blocking chamber through the screw plug (27).
2) Remove the hexagonal head screws (72).
3) Loosen and remove the connection cover (12) and the Intake cover (53) from the pump plate (52). Remove O-ring (67).
4) Remove the suction screw (57).
5) Use two screwdrivers to push the impeller (56) from the insert shaft (91). Insert the screwdrivers between the impeller (56) and the pump plate (52).
6) Remove the woodruff key (65) from the insert shaft (91) and remove the pump plate (52) and O-ring (67).
7) Remove the running sleeve (80) and the spacer sleeve (60). Use two screwdrivers to push the impeller (55) from the quick shaft (91). Insert the screwdrivers between the impeller (55) and the pump plate (54).
8) Remove the Woodruff key (64) from the insert shaft (91). Remove the pump plate (54) and the O-ring (67).
9) Remove the spacer sleeve (59) and use two screwdrivers to push the impeller (55) from the quick shaft (91). Insert the screwdrivers between the impeller (55) and the pump body (50).
10) Remove the woodruff key (64), the spacer ring (63), the circlip (25) and the mech. seal washer (22) from the insert shaft (91). Remove the rotating axial face seal unit (24b-24e).
11) Loosen the Socket head cap screws (17) and remove the pump body (50).
12) Remove circlip (25) and the mech. seal washer (22) and remove the rotating axial face seal unit (24b-24e).
    To replace the insert shaft, see position 11.2).
    When changing an axial face seal, remove the stationary axial face seal unit (24a) from the pump body (50) and seal insert (20). Clean the seat of the seal and the pump parts.
    The mechanical seal (24) should now be completely replaced. If necessary replace the O-rings (67, 68, 78) and impellers (55, 56).
13) Fit a new mechanical seal.
    The sliding surfaces of the axial face seal must be free of dirt and grease. Lightly moisten the collar (24a) with coolants or oil and press the stationary axial face seal unit (24a) into the pump body (50) and seal insert (20). Slide the rotating axial face seal unit (24b-24e) onto quick shaft (91) and fix in position using mech. seal washer (22) and circlip (25).
14) The remaining assembly steps are Pos 2) to 10) in reverse order.

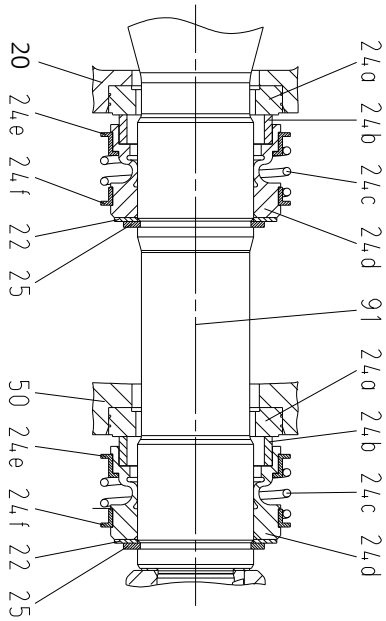

11.2 Dismantling the insert shaft

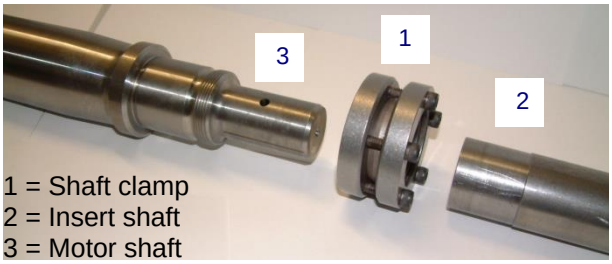

1) Disconnect the inline pump from the mains both electrically and mechanically.
2) Remove the pump.
3) Empty out the Pump and dismantle the pump unit.

Wear safety gloves!
Risk of injury due to sharp edges on pump components, i.e. impeller blades.

4) Dismantle the pump body and the pump foot
5) Loosen the screws on the shaft clamp (1) one after the other.

Do not, under any circumstances, remove the screws completely, **danger of injury!**

6) Pull the insert shaft (2) and the shaft clamp (1) off the motor shaft (3).

11.3 Assembling the insert shaft and motor shaft

ATTENTION

Clean the contact surfaces of the insert shaft (2) (inside) and the motor shaft (3). They must not be lubricated or oiled.

7) Set the motor down on the fan cover.
8) Position the shaft clamp (1) (use a new shaft clamp) in the centre of the cranked clamping diameter (2) of the insert shaft.
9) Insert the insert shaft (2) into the motor shaft (3).
10) **Tighten:**
Mark the first screw and tighten all the screws evenly by hand, one after the other in a clockwise direction (not cross-ways).

– Tighten the shaft clamp **(∅ 24 mm**) for SBA401-V, 601-V, SBG501-V and SBF550-V
Use a torque screwdriver to tighten each screw first with 1.3 Nm then with 2.6 Nm and finally with 4 Nm (in a clockwise direction again).
Repeat the last turn (with 4 Nm) 3 times.

– Tighten the shaft clamp **(∅ 35 mm**) for SBA402…403-V, 602…604-V and SBG502…SBG503-V
Use a torque screwdriver to tighten each screw first with 2 Nm then with 3.5 Nm and finally with 5 Nm (in a clockwise direction again)
Repeat the last turn (with 5 Nm) 3 times.

11) Mount the pump foot and the pump body.

The remainder of the reassembly process is to be completed in the opposite order of the prior described dismantling process.

ATTENTION

Note torques for the screw connections!

12) Position the pump laterally and fill the pump blocking chamber (-GD) with oil until it reaches the oil inspection window (27) (0.28 litres). Fit the sealing ring (28) and screw on the screw plug (27).

When putting the pump back into use, **make sure the direction of rotation is correct!**

Tightening torques for screwed connections

Thread - ∅	**M5 / M6**	**M8**	**M12**
Strength classes	8.8	8.8	8.8
Tightening torque (Nm)	**3 / 4.5** Nm	**20** Nm (**11** Nm Item 3)	**30** Nm Item 83

12 Disposal

When disposing of the pump or the packaging materials the local and national regulation for proper disposal must be complied with.
Prior to its disposal, the pump must be completely drained and decontaminated if necessary.

13 Declarations of conformity

13.1 UK declaration of conformity

BRINKMANN PUMPS

UK declaration of conformity

Manufacturer
Brinkmann Pumpen, K. H. Brinkmann GmbH & Co. KG
Friedrichstraße 2
D-58791 Werdohl
Germany

This declaration of conformity is issued under the sole responsibility of Brinkmann Pumps and belongs to the following product.

Product name
Vertical End-Suction Pumps
Type **SBA401…604-V, SBG501…503-V, SBF550-V**

The named product described above complies with the following statutory requirements of United Kingdom:

UK SI 2008 No. 1597	**The Supply of Machinery (Safety) Regulations 2008**
UK SI 2016 No. 1091	**The Electromagnetic Compatibility Regulations 2016**
UK SI 2020 No. 1647	**The Restriction of the Use of Certain Hazardous Substances in Electrical and Electronic Equipment Regulations 2020**

The following exceptions in accordance with table 1, "Table of exempted applications" are claimed: No.12 (6a), No.15 (6b)

The following designated standards and technical specification have been applied:

EN 809:1998+A1:2009+AC:2010	**EN ISO 12100:2010**	**EN 60204-1:2018**
EN IEC 61000-3-2 :2019	**EN 61000-3-3 :2013+A1 :2019**	**EN IEC 61000-6-2 :2019**
EN IEC 61000-6-3 :2021	**EN IEC 63000 :2018**	

Additionally the following standard has been applied:

EN 60034-1 :2010/AC :2010

The instructions contained in the operating manual for installation and start up the pump have to be followed.

Brinkmann Pumpen, K. H. Brinkmann GmbH & Co. KG
Werdohl, 18.01.2023

.....
Dr.-Ing. Dirk Wenderott
Chief Product Officer (CPO)
Head of Engineering

Dr. H. Abou Dayé
K. H. Brinkmann GmbH & Co. KG
Friedrichstraße 2, D-58791 Werdohl
Representative of documentation

13.2 EC declaration of conformity

DEUTSCH / ENGLISH /FRANÇAIS / ESPAÑOL

EG-Konformitätserklärung

EC declaration of conformity / Déclaration de conformité CE / Declaración de conformidad CE

Hersteller / Manufacturer / Constructeur / Fabricante

Brinkmann Pumpen, K. H. Brinkmann GmbH & Co. KG
Friedrichstraße 2, D-58791 Werdohl

Produktbezeichnung / Product name / Désignation du produit / Designación del producto

Vertikale Blockpumpen / Vertical End-Suction Pumps / Pompes verticales monobloc / Bombas verticales monobloc

Typ / Type / Tipo **SBA401…604-V, SBG501…503-V, SBF550-V**

Das bezeichnete Produkt stimmt mit den folgenden Richtlinien des Rates zur Angleichung der Rechtsvorschriften der EG-Mitgliedsstaaten überein:
The named product conforms to the following Council Directives on approximation of laws of the EEC Member States:
Le produit sus-mentionné est conforme aux Directives du Conseil concernant le rapprochement des législations des Etats membres CEE:
El producto designado cumple con las Directivas del Consejo relativas a la aproximación de las legislaciones de los Estados Miembros de la CEE:

2006/42/EG	Richtlinie für Maschinen
2006/42/EC	Council Directive for machinery
2006/42/CE	Directive du Conseil pour les machines
2006/42/CE	Directivas del Consejo para máquinas
2014/30/EU	Richtlinie für elektromagnetische Verträglichkeit
2014/30/EU	Council Directive for Electromagnetic compatibility
2014/30/UE	Directive du Conseil pour Compatibilité électromagnétique
2014/30/UE	Directivas del Consejo para Compatibilidad electromagnética
2011/65/EU und 2015/863/EU	RoHS Richtlinien
2011/65/EU and 2015/863/EU	RoHS Directives
2011/65/UE et 2015/863/UE	Directives RoHS
2011/65/UE y 2015/863/UE	RoHS Directivas

Folgende Ausnahmen gem. Anhang III RoHS (2011/65/EU) werden in Anspruch genommen: 6a, 6b.
The following exceptions in accordance with appendix III RoHS (2011/65/ EU) are claimed: 6a, 6b.
Les exceptions suivantes selon l'annexe III RoHS (2011 / 65 / UE) sont revendiquées : 6a, 6b.
Las siguientes excepciones conforme al apéndice III RoHS (2011/65 / UE) son requeridas: 6a, 6b.

Hinsichtlich der elektrischen Gefahren wurden gemäß Anhang I Nr. 1.5.1 der Maschinenrichtlinie 2006/42/EG die Schutzziele der Niederspannungsrichtlinie 2014/35/EU eingehalten.

With respect to potential electrical hazards as stated in appendix I No. 1.5.1 of the machine guide lines 2006/42/EC all safety protection goals are met according to the low voltage guide lines 2014/35/EU.

Conformément à l'annexe I N° 1.5.1 de la Directive "Machines" (2006/42/CE) les objectifs de sécurité relatifs au matériel électrique de la Directive "Basse Tension" 2014/35/UE ont été respectés.

Con respecto al potencial peligro eléctrico como se indica en el apéndice I No. 1.5.1 del manual de la máquina 2006/42/CE, todos los medios de protección de seguridad se encuentran según la guía de bajo voltaje 2014/35/UE.

Die Übereinstimmung mit den Vorschriften dieser Richtlinien wird nachgewiesen durch die vollständige Einhaltung folgender Normen:

Conformity with the requirements of this Directives is testified by complete adherence to the following standards:

La conformité aux prescriptions de ces Directives est démontrée par la conformité intégrale avec les normes suivantes:

La conformidad con las prescripciones de estas directivas queda justificada por haber cumplido totalmente las siguientes normas:

Harmonisierte Europ. Normen / Harmonised Europ. Standards / Normes europ. harmonisées / Normas europ. Armonizadas

EN 809 :1998+A1 :2009+AC :2010	**EN ISO 12100 :2010**	**EN 60204-1 :2018**	**EN IEC 61000-3-2 :2019**
EN 61000-3-3 :2013+A1 :2019	**EN IEC 61000-6-2 :2019**	**EN IEC 61000-6-3 :2021**	**EN IEC 63000 :2018**

Nationale Normen / National Standards / Normes nationales / Normas nacionales : **EN 60034-1 :2010/AC :2010**

Die Hinweise in der Betriebsanleitung für den Einbau und die Inbetriebnahme der Pumpe sind zu beachten.

The instructions contained in the operating manual for installation and start up the pump have to be followed.

Les indications d'installation / montage et de mise en service de la pompe prévues dans l'instruction d'emploi doivent être suivies.

Tenga en cuenta las instrucciones en el manual para la instalación y puesta en marcha de la bomba.

Brinkmann Pumpen, K. H. Brinkmann GmbH & Co. KG

Werdohl, 18.01.2023

.....
Dr.-Ing. Dirk Wenderott
Chief Product Officer (CPO)
Head of Engineering

Dr. H. Abou Dayé
K. H. Brinkmann GmbH & Co. KG
Friedrichstraße 2, D-58791 Werdohl
Dokumentationsbevollmächtigter / Representative of documentation/ Mandataire de documentation / Mandatario de documentación